... a link to the future

Product Information

VS 80A Multiband amplifier VHF-UHF, FM

WISI MINI LINE

- 4 x inputs 2 x UHF, VHF III, VHF I, FM
- Adjustable input level
- Power indicator
- F-type connector
- Wall mounting

VS 80A Multiband amplifier VHF-UHF, FM

Specifications

Frequency range		
Input 1	VHF I / FM	87-108 MHz
Input 2	VHF III	174-230 MHz
Input 3	UHF 1	470-862 MHz
Input 4	UHF 2	470-862 MHz
Max. gain		
Input 1	VHF I / FM	max. 38 dB
Input 2	VHF III	max. 37 dB
Input 3	UHF 1	max. 42 dB
Input 4	UHF 2	max. 42 dB
Input level adjustable		0 -18 dB
Distorsion products @ 60 dB IMA 3rd order		
Input 1	VHF I / FM	120 dBµV + 2 dBµV
Input 2	VHF III	120 dBµV + 2 dBµV
Input 3	UHF 1	119 dBµV + 2 dBµV
Input 4	UHF 2	119 dBµV + 2 dBµV

Generals

RF-input / output	75 Ω / F
Power supply	230 VAC 50/60 Hz
Power consumption	max.3,5 W
Ambient temperature	-20°C...+55°C
Storage temperature	-25°C...+75°C
Max. humidity non condensing	95 %
Dimensions	163 x 117 x 52 mm

Blockdiagram

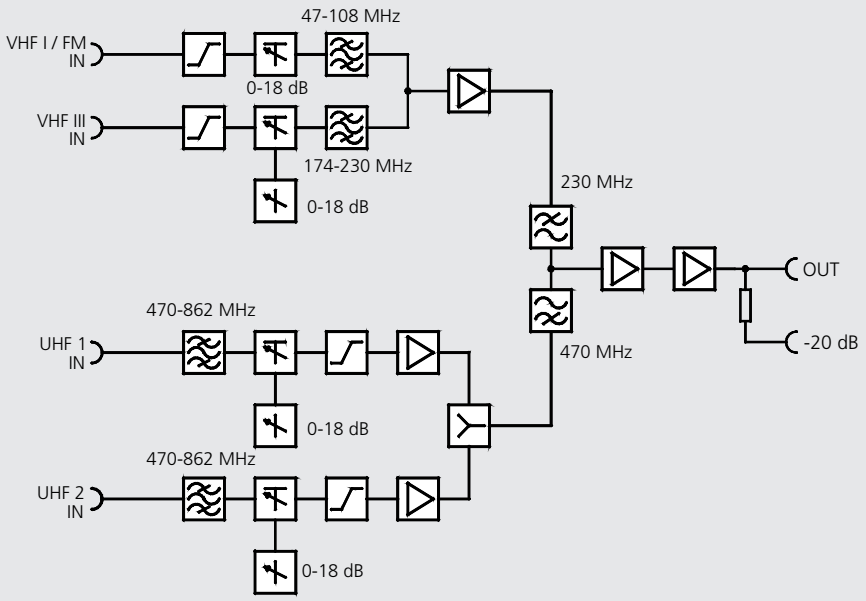

WISI Communications GmbH & Co. KG
Empfangs- und Verteiltechnik
P.O. BOX 1220
75219 Niefern-Oeschelbronn, GERMANY
Phone +49/(0)7233/66-280
Fax +49/(0)7233/66-350
www.wisi.de
export@wisi.de

Technical Modifications reserved. WISI cannot be held liable for any printing error!

084 008 / 03.07

... a link to the future